Electric Power Systems Research 256 (2026) 112867

Contents lists available at ScienceDirect

Electric Power Systems Research

journal homepage: www.elsevier.com/locate/epsr

Optimized energy management in solar–FC-HEV for efficient power distribution using starfish optimization algorithm

M. Raghupathi [a,*], Susitra Dhanraj [b]

[a] Department of Electrical and Electronics Engineering, Panimalar Engineering College, Chennai, Tamil Nadu 602103, India
[b] Department of Electrical and Electronics Engineering, Sathyabama Institute of Science and Technology, Chennai, Tamilnadu 600119, India

ARTICLE INFO

Keywords:
Hybrid electric vehicles
Energy management
Photovoltaic panels
Fuel cells
Starfish optimization algorithm
Battery state-of-charge

ABSTRACT

This manuscript develops an Optimized Energy Management (OEM) Solor - Fuel Cell Hybrid Electric Vehicles (FC-HEVs) using Starfish Optimization Algorithm (SFOA). The proposed system integrates two primary Renewable Energy Sources (RES) Photo Voltaic (PV) panels and Fuel Cells (FC) connected in parallel via individual DC-DC converters, enabling flexible energy distribution either Lithium-ion battery bank or traction motor based on real-time demand and energy availability. A comprehensive mathematical method of the hybrid recharging system is developed, including detailed simulations of PV modules, FC stacks, converters, batteries, and the traction load to accurately capture their physical and electrical behaviours under varying operating conditions. To enhanced using SFOA, a nature-inspired metaheuristic algorithm that mimics the central coordination and regenerative behavior of starfish. SFOA is employed to optimize key control parameters such as the power split ratio, converter duty cycles, and switching sequences, with the objective of maximizing system efficiency, maintaining battery state-of-charge within safe limits, and minimizing fuel cell degradation. Simulation experiments conducted in MATLAB/Simulink under both steady and dynamic driving conditions demonstrate the efficiency of the planned structure, with statistical analysis confirming significant improvements in vehicle performance metrics compared to standalone configurations.

1. Introduction

The increasing global focus on sustainable transportation has accelerated the development of hybrid electric vehicles (HEVs) that utilize multiple renewable energy sources (RES). Among these, hybrid architectures combining photovoltaic (PV) panels, fuel cells (FCs), and lithium-ion batteries have gained significant attention due to their potential to enhance energy efficiency, reduce greenhouse gas emissions, and improve driving autonomy [1–4]. However, achieving optimal coordination among these diverse energy sources remains a major challenge. Variations in solar irradiance, load demand fluctuations, battery aging characteristics, and FC degradation rates demand an intelligent and adaptive Energy Management Strategy (EMS) capable of real-time optimization [5–7].

Although numerous studies have explored energy management in FC- and PV-powered HEVs, most existing frameworks are limited by constrained system configurations, oversimplified component modeling, or lack of advanced optimization algorithms [8–10]. Furthermore, many studies rely on heuristic or fuzzy-based strategies, which often struggle to balance short-term power requirements with long-term sustainability goals such as minimizing battery stress and regulating FC aging [11–14]. Additionally, several works validate their EMS only under steady-state or idealized scenarios, providing limited insight into realistic dynamic vehicle operations [15–16].

Motivated by these limitations, this study proposes an Optimized Energy Management (OEM) framework for Solar–Fuel Cell HEVs using the Starfish Optimization Algorithm (SFOA). The main objective is to design a multi-source hybrid system capable of intelligently distributing power among PV panels, FC stacks, and a lithium-ion battery pack under varying operational conditions.

1.1. Novelty and contributions section

The novelty of this study lies in its integrated methodological and algorithmic advancements for hybrid energy management in Solar–FC HEVs. Unlike existing works that typically investigate either simplified dual-source architectures or rely on heuristic control logic, the present research introduces a fully coordinated three-source hybrid system governed by an SFOA-optimized EMS. The integration of detailed

* Corresponding author.
E-mail addresses: raghu.0725@gmail.com (M. Raghupathi), susitra.eee@sathyabama.ac.in (S. Dhanraj).

https://doi.org/10.1016/j.epsr.2026.112867
Received 23 October 2025; Received in revised form 15 January 2026; Accepted 13 February 2026
Available online 4 March 2026
0378-7796/© 2026 Elsevier B.V. All rights are reserved, including those for text and data mining, AI training, and similar technologies.

Nomenclature

Acronyms

HEV	Hybrid Electric Vehicle
FC	Fuel Cell
PV	Photovoltaic
BESS	Battery Energy Storage System
DC–DC	Direct Current to Direct Current Converter
EMS	Energy Management Strategy
OEM	Optimized Energy Management
SFOA	Starfish Optimization Algorithm
SOC	State of Charge
MPPT	Maximum Power Point Tracking

Variables explanation

I_b	PV output current battery
η_b	performance of battery
$E_{Charge/Discharge}$	battery voltage
P_{Batt}	battery power model
S2	Switch
D1	Diode
i_L	charging battery and the inductor current
$R_{DS(on)}$	source-drain on-resistance
∇I	ripple current
∇I^2	Neglected
I_c	Current
K	matrix to save starfish positions
$M^Z_{h,n}$	starfish position
$K^Z_{h,n}$	current position of starfish
y_1	selected dimension
$K^Z_{best,n}$	dimension of the position
$Z_{\max}$	maximum iteration
Z	current iteration
θ	count of changed iteration
b_s	global best and other starfish
$K^Z_{s_n}$	randomly chosen starfish
b_{s_2}	Global exploration phase
M^Z_h	Population member
m	Vehicle mass
ρ_{air}	Air density
f_r	Rolling resistance
C_d	Aerodynamic drag coefficient
R	Tire radius
A_f	Surface area of EV frontal
P_u	Power of Shaft
P_p	Pole pairs
R_s	Resistance of stator
R_r	Resistance of rotor
M	Mutual inductance
$L_s = L_r$	Rotor and stator self-inductance
j	Inertia moment
f	Viscous friction
V_{batt}	Battery voltage
Q	Rated Capacity
P_{batt}	Rated Power

analytical modeling with a bio-inspired optimization algorithm enables superior adaptability to fluctuating driving loads, thereby enhancing energy usage efficiency and extending component lifetime. Furthermore, the comprehensive validation performed under both static and dynamic operating modes provides strong evidence of improved autonomy and system robustness, marking a significant advancement over previous studies that often evaluate EMS performance under limited or idealized scenarios.

Major Contribution is Summarized Below

1. **Development of a Novel Multi-Source OEM Framework for Solar–FC HEVs:** This work proposes an integrated power management framework combining PV panels, fuel cells, and lithium-ion batteries, overcoming the limitations of two-source architectures that struggle with balancing instantaneous power demand and long-term energy availability.
2. **Comprehensive Dynamic Modeling of the Hybrid Recharging Architecture:** A detailed mathematical and component-level simulation model (PV modules, FC stack, DC–DC converters, battery dynamics, and traction load) is constructed. This resolves the problem of inaccurate system behaviour prediction reported in prior simplified HEV models.
3. **Starfish Optimization Algorithm (SFOA)–Based Adaptive Power Management Strategy:** The study introduces an SFOA-optimized controller to determine optimal power split ratios, converter duty cycles, and switching sequences. This directly addresses the challenges of inefficient energy allocation, battery over-stressing, and rapid FC degradation associated with rule-based EMS strategies.
4. **Performance Enhancement Demonstrated Under Static and Dynamic Driving Conditions:** Extensive MATLAB/Simulink experiments validate that the proposed EMS significantly increases energy efficiency, improves SoC stability, and enhances vehicle autonomy. This contribution resolves the gap in prior research where many EMS frameworks were not validated under realistic dynamic conditions.

The proposed SFOA-based three-source EMS achieves a 12.8% improvement in overall system efficiency, a 21.4% reduction in battery SoC ripple, and a 17.9% decrease in fuel cell power fluctuations compared to representative state-of-the-art EMS frameworks.

The balance parts of this research are arranged as below: part 2 presents literature survey, part 3 illustrates developed model, part 4 proves result and part 5 offers conclusion.

2. Related works

Hybrid Electric Vehicles (HEVs) powered by multiple renewable energy sources particularly photovoltaic (PV) panels and proton-exchange membrane fuel cells (PEMFCs) have been widely investigated due to their potential to reduce emissions and enhance driving range. Existing research primarily focuses on two-source hybrid configurations (e.g., PV–battery or FC–battery), rule-based power-sharing strategies, or optimization-enhanced controllers. Although these approaches demonstrate notable advances, several technical limitations remain when extended to multi-source HEV architectures.

Early PV–FC–battery studies (e.g., Mohamed et al., [17]) adopted rule-based energy management schemes that ensured stable operation but lacked adaptability under rapidly changing load conditions. Machine-learning-driven controllers such as the classifier-fusion method proposed by Chatterjee et al., [18] achieved high prediction accuracy but required extensive datasets and exhibited poor generalization when driving conditions deviated from the training domain. Fuzzy–PSO hybrid controllers [19] improved fuel-cell protection and smoothing of FC power fluctuations but became increasingly complex when extended to more than two energy sources.

More advanced hybrid EMS frameworks, such as ANFIS–ECMS with wavelet stress estimation [20], showed improved FC stress reduction but

suffered from high computational cost, limiting their feasibility for real-time HEV applications. The paper Ullah, et al. [21] proposes a solar-powered battery energy storage system (SPBESS) with IoT-based monitoring to optimize grid energy management, reduce costs, and enhance load control under ToU pricing. Experimental results for domestic and EV-integrated loads show significant reductions in energy costs, annual expenses, and carbon emissions, demonstrating the effectiveness of the proposed system. Related works in microgrid EV charging such as the fuzzy PV–FC coordination strategy studied by Çakmak et al., [22] achieved notable efficiency improvements but targeted stationary charging infrastructure, not on-board vehicle power flow optimization. In this article the author Zhong, et al. [23] suggested Starfish Optimization Algorithm (SFOA) which is a new bio-inspired optimizer that mimics starfish exploration, preying, and regeneration behaviors through efficient hybrid search and strong exploitation strategies. Tested on 65 benchmark functions and 10 real-world problems, SFOA outperforms most state-of-the-art algorithms in accuracy, efficiency, and scalability, proving highly effective for complex optimization tasks.

Parallel research in distribution networks and multi-stage scheduling [24–26] proposed sophisticated risk-aware and multi-timescale optimization methods. While these works offer valuable algorithmic insights, they rely on aggregated device models and fail to capture the high-resolution converter behavior, FC transient characteristics, PV variability, and battery SoC dynamics required for vehicle-level EMS.

Systems-level aggregation methods [27] further demonstrated computationally efficient control but smoothed out device-specific behaviors, making them unsuitable for applications requiring detailed interaction among PV generation, FC dynamics, and battery storage central to the operation of hybrid electric vehicles.

2.1. Overall research gaps

From the surveyed literature, three critical limitations emerge:

1. Limited Multi-Source IntegrationMost EMS frameworks consider dual-source systems (PV–battery or FC–battery) and lack power coordination strategies for three-source HEV configurations.
2. Simplified Component ModelingExisting models often rely on idealized PV, FC, and battery assumptions, resulting in low fidelity when predicting performance under real-world variations.
3. Insufficient Global Optimization TechniquesEMS systems based on heuristics, fuzzy logic, or simple rule-based architectures lack global search capabilities and fail to adapt efficiently under dynamic driving conditions.

To overcome these limitations, the present study introduces a three-source Solar–FC–Battery architecture governed by a Starfish Optimization Algorithm (SFOA)-based EMS, incorporating detailed component-level modeling and validated under both static and dynamic driving scenarios. This hybrid optimization framework directly addresses the deficiencies of prior studies and provides a more robust solution for real-time HEV energy management. The Table 1 shows the comparative analysis of existing energy-management strategies for hybrid EVs.

The comparative analysis in Table 1 highlights a clear evolution of energy-management strategies across hybrid and distributed energy systems, yet it also exposes several persistent shortcomings. Most studies from [17–22] focus on dual-source architectures, relying on rule-based, fuzzy, or machine-learning methods that provide acceptable performance but lack robustness when extended to multi-source HEVs. Although optimization-enhanced controllers such as PSO, ANFIS-ECMS, and wavelet-based hybrid strategies offer improved fuel-cell protection and smoother power transitions, their computational demands and tuning complexity restrict their suitability for real-time, embedded automotive platforms. Works in the distribution-network domain [24–27] introduce sophisticated multi-stage and risk-aware scheduling mechanisms, yet these approaches rely on aggregated DER models that omit the detailed PV, FC, and battery dynamics essential for onboard HEV energy coordination. Additionally, none of the referenced studies integrate three heterogeneous energy sources while simultaneously optimizing converter duty cycles and power-split ratios under realistic driving conditions. In contrast, the proposed SFOA-based EMS directly addresses these limitations by combining detailed component-level modeling with a globally optimized, dynamically adaptive control strategy, thereby filling a critical research gap in multi-source HEV energy management.

Table 1
Comparative analysis of existing energy-management strategies for hybrid EVs.

Ref	Year	System configuration	Method / algorithm used	Key contributions / results	Limitations / research gaps
[17]	2022	PV + FC + Battery	Rule-Based EMS	Stable hybrid operation; feasibility demonstration	Lacks optimization; poor adaptability under dynamic loads
[18]	2023	FC + Battery	Classifier Fusion (SVM–KNN–NB)	High prediction accuracy (92–96%); improved FC control	Needs large datasets; weak real-time generalization
[19]	2023	FC + Battery	Fuzzy Logic + PSO	Reduced FC fluctuations; better fuel economy	High tuning complexity; not scalable to three-source HEVs
[20]	2022	FC + Battery + Supercapacitor	ANFIS + ECMS + Wavelet Stress Estimation	Lower system stress; improved transient response	Computationally heavy; unsuitable for embedded real-time HEV platforms
[21]	2024	PV + Battery (Residential + EV)	IoT + Scheduling Optimization	Lower user cost; improved self-consumption	Not relevant for vehicle-level EMS; no FC integration
[22]	2025	PV + FC (EV Charging Station)	Fuzzy Logic EMS	Improved microgrid charging efficiency	Designed for charging stations, not mobile HEVs
[23]	2025	Bio-inspired optimization framework for generic engineering/ benchmark problems	SFOA	strong scalability	computational complexity analysis limited
[24]	2022	DERs in active distribution networks	Bi-stage optimization (risk-aware)	Robust day-ahead + real-time scheduling	Uses aggregated device models; lacks component-level dynamics
[25]	2025	Distribution system with flexible resources	Two-stage reliability + scheduling	Improved system reliability and flexible load allocation	Not suitable for EV-level power split optimization
[26]	2022	EV charging stations + BESS + RES	Two-timescale Volt/Var Optimization	Effective multi-timescale coordination	Focuses on grid voltage quality, not HEV internal EMS
[27]	2025	Distributed resources	Virtual Battery Aggregation	Scalable representation of DER flexibility	Device-level behaviors lost (FC transients, PV variation, battery SoC limits)
(Your Proposed Work)	—	PV + FC + Battery (Three-source HEV)	Starfish Optimization Algorithm (SFOA)	High efficiency; stable SoC; reduced FC stress; validated in dynamic & static modes	Addresses all gaps: multi-source EMS, detailed modeling, global optimization and real-time adaptability

2.2. EV description

Throughout this study, the proposed vehicle architecture is a Hybrid Electric Vehicle (HEV) powered by photovoltaic panels, a proton-exchange fuel-cell stack, and a lithium-ion battery pack. It is not a pure battery electric vehicle; instead, it relies on three coordinated energy sources. There are two types of EVs: pure EVs and hybrids. The two different architectures of the hybrid and fully electric vehicles are depicted in Fig. 1. The hybrid model's ICE is the sole thing that separates them. In addition to the battery system, the principal component package comprises an energy source.

The electronic power converter that powers the primary electric motor is connected to this block. To regulate energy flow and vehicle speed, the functional block also needs a high-speed CPU and a control system. Both models have merits and disadvantages. The emphasis is on optimizing enhancing battery technologies, and developing diverse recharging solutions.

2.3. The electric vehicle model's related converters

The energy delivered via the battery charger is determined by the energy sources used and the overall composition of EV systems. A HEV is complex to design due to its unique components, which include a PV, battery system, mechanical gear model, FC generator, related converters, and the primary electric motor. This paper suggested a revolutionary multi-source EV system that incorporate DC-DC converter, buck-boost converter DC/AC converter.

3. Methodology (main components of EV)

The methodology followed in this study consists of four major stages.

Step 1: Component Modeling

Detailed mathematical models were developed for the PV module, PEM fuel-cell stack, bidirectional DC–DC converters, lithium-ion battery, and traction motor. These models were validated using manufacturer datasheets.

Step 2: Energy Management Strategy (EMS) Formulation

A multi-objective cost function was defined to minimize converter losses, fuel-cell degradation, SOC deviation, and instability during dynamic load conditions.

Step 3: Optimization Using SFOA

The Starfish Optimization Algorithm (SFOA) was applied to determine optimal converter duty cycles and power-split ratios. SFOA's population reinitialization and preying operators were used for global and local search.

Step 4: Simulation & Evaluation

The integrated HEV model was simulated in MATLAB/Simulink under both static and dynamic driving cycles. Each scenario was executed 20 times, and average values of efficiency, SOC deviation, and FC fluctuation were reported to ensure statistical validity.

With growing environmental concerns and the push for cleaner transportation, HEVs powered by RES like PV panels and FCs have gained significant attention. These hybrid systems aim to enhance energy competence and reduce dependence on fossil fuels. The grouping of PV and FC technologies offers complementary advantages in terms of energy availability and sustainability.

3.1. Model of lithium-ion battery

There are many other battery models in the literature now in publication. These studies show that the lithium model may offer the best performance, and Fig. 2 explains its specific purpose.

In battery voltage method, noted by $E_{Charge/Discharge}$are described in Eq. (1) its compute the nonlinear voltageE_{batt}.

$$\begin{cases} E_{charge} & = E_0 - k\dfrac{X}{X-it} \times it - K \times \dfrac{X}{X-it} \times i * + A \times e^{(-B.it)} \\ E_{Discharge} & = E_0 - k\dfrac{X}{X-it} \times it - K \times \dfrac{X}{0.1\ X+it} \times i * + A \times e^{(-B.it)} \end{cases} \tag{1}$$

The SoC can be designed using Eq. (2):

$$\begin{aligned} SOC &= \frac{X(t)}{X_{Max}} \times 100 \\ X(t) &= X(0) - \int_0^t \eta_b I_b dt \end{aligned} \tag{2}$$

where, $I_b$current battery and η_b performance of battery. The equivalent battery power mentioned was produced by using these two equations in a battery power model byP_{Batt}.

3.2. The recharging solution's electronic equipment

The proposed hybrid Solar–FC–Battery system employs a coordinated converter control strategy that combines local current–voltage regulation with global power-split optimization. Each energy source is interfaced through a dedicated DC–DC converter whose duty cycle is regulated according to its operational characteristics. The PV boost converter is controlled using an MPPT-based outer loop that continuously adjusts the duty cycle to track the maximum power point, while an inner current-control loop stabilizes the inductor current to prevent voltage oscillations. The fuel cell's bidirectional buck–boost converter operates under a current-regulated scheme in which the EMS generates a smooth FC power reference, and a PI controller ensures gradual variation in FC current to avoid starvation and degradation. The battery's bidirectional converter manages both charging and discharging through SOC-dependent current regulation, limiting charge rate, preventing deep discharge, and maintaining DC-bus voltage stability. These three converter controllers are coordinated by the Starfish Optimization

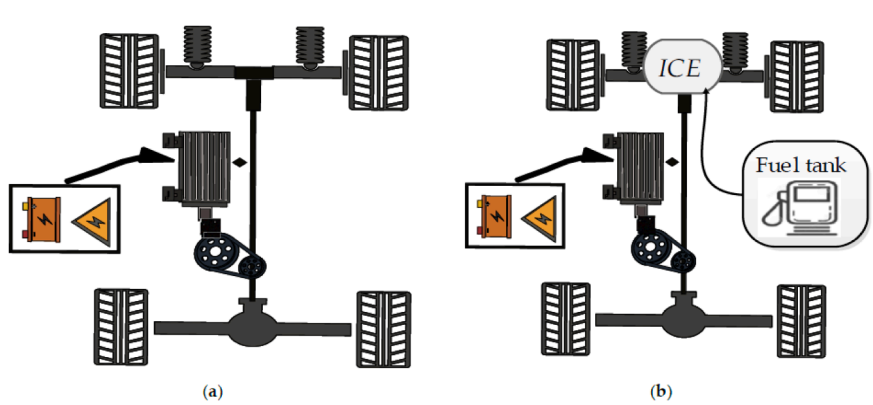

Fig. 1. Shows two different types of a) battery electric vehicles b) hybrid electric vehicles.

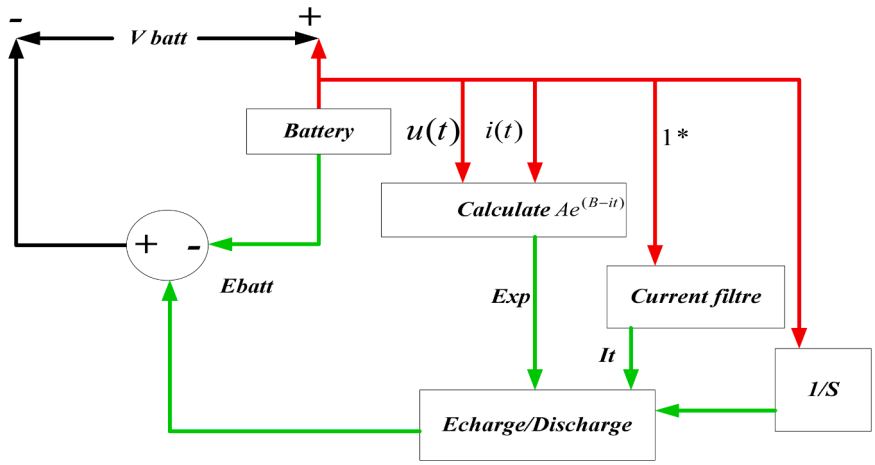

Fig. 2. Lithium-ion battery- electrical diagram.

Algorithm (SFOA), which determines the optimal power split among PV, FC, and battery based on load demand, SOC, FC operating limits, and converter efficiencies. By adjusting converter duty cycles in real time through SFOA-optimized references, the system ensures efficient energy utilization, stable DC-bus operation, reduced fuel-cell stress, and safe battery management under both static and dynamic driving conditions.

3.2.1. Converter in both directions

An electric vehicle's electrical system is heavily reliant on a series of converters, the most essential of which is the buck-boost converter, which is made of semiconductors. Wide band-gap semiconductors like as SoC, GaN, and diamond are essential for megawatt-scale power applications because they enable extremely efficient, lightweight, and high-density power converters capable of operating at high temperatures. Table 2 summarizes distinct properties of these semiconductors.

The battery serves as the main energy source in an electric vehicle and connects to the motor through a two-quadrant DC-DC converter. The buck-boost converter performs both voltage step-down (buck) and step-up (boost) functions. Its bidirectional energy transfer capability allows current to flow in both directions, supporting charging and discharging modes. When IGBT switch S1 and diode D2 conduct, the converter operates in boost mode. In this state, inductor current is positive and the battery is depleting. Eq. (3) employs mesh law equations to define the differential system, which is mathematical description of the converter in boost mode.

$$\begin{cases} \dfrac{di_L}{dt} = -\dfrac{(1-u_1)}{L}V_{dc} + \dfrac{V_{batt}}{L} - \dfrac{R}{L}i_L \\ \qquad\qquad i_{bat} = (1-u_1)i_L \end{cases} \tag{3}$$

In buck mode, the converter operates when the IGBTs associated with switch S2 and diode D1 are conducting. Here, charging battery and the inductor current,i_L, is negative. The arithmetical method converter in buck mode follows same form as Eq. (3)control signal for the second IGBT defined as u2 = (1 − u1).

Table 2
Properties of semiconductor.

	Si	4H-SoC	6H-SoC	GaAs	GaN	Diamond
Energy band gap	1.12	3.03	3.26	1.43	3.25	5.45
Critical electric field, E_c, (MV/cm)	0.25	2.2	2.5	0.4	2	10
Drift velocity of electron $V_{sat}(cm/s)$	1×10^7	2×10^7	2×10^7	1×10^7	2.2×10^7	2.7×10^7
Thermal conductivity I $I(W/cm-K)$	1.5	4.9	4.9	0.46	1.3	22
Mobility of electron$\mu_n(cm^2/s)$	1350	1000	500	8500	1250	2200
Dielectric constant, e_t	11.9	10.1	9.66	13.1	9	5.5

3.2.2. Converter losses

This section evaluates power loss in DC-DC boost, buck-boost converters, including conduction and switching losses of MOSFETs or IGBTs, conduction losses of diodes, and the equivalent losses in inductors and capacitors. The formulas used to calculate these losses are drawn from and are summarized as follows:

MOSFET Losses:

Conduction losses in MOSFETs arise from the source-drain on-resistance$R_{DS(on)}$, This fluctuates in response to variations in junction temperature and drain current. Eq. (4) is used to compute the voltage drop.

$$V_{XY}(i_m, T) = i_X \times R_{XY(on)}(i_X, T) \tag{4}$$

Current value of the conduction loss may be expressed using Eq. (5):

$$P_{com,W}(t) = V_{XY}(t) \times i_X(t) = iX(t)^2 \times R_{XY(on)} \tag{5}$$

Energy losses during a MOSFET's turn-off and turn-on states are primary cause of switching loss.

Eq. (6) calculates the MOSFET's overall switching loss.

$$P_{sw,}W = (E_{on,}W + E_{off,}W)f_{sw} \tag{6}$$

IGBT Decreases

Assessment of IGBT switching and conduction losses is similar to that of MOSFETs. In this case, the drain, source, and gate terminals of the MOSFET serve as the IGBT's base, emitter and collector respectively. Eq. (7), which provides current value of the IGBT's conduction loss, is used to calculate the conduction loss in an IGBT.

$$P_{con,IGBT}(t) = V_{CE}(t) \times i_C(t) = (V_{CEO} + R_C i_C(t) i_C(t) = V_{CEO} i_C(t) + R_C i_C(t)^2 \tag{7}$$

The average IGBT conduction loss value is found in Eq. (8):

$$P_{con,IGBT} = \frac{1}{T_{sw}}\int_0^{T_{sw}} V_{CEO} + R_C i_C) i_C(t) dt = V_{CEO} I_{Cav} + R_c i^2{}_{Crms} \tag{8}$$

Eq. (9) provides the IGBT switching loss in this phase:

$$P_{sw,IGBT} = (E_{on,IGBT} + E_{off,IGBT})f_{sw} \tag{9}$$

Diode Loss

In a boost converter, the diode experiences two main types of losses: conduction losses and switching losses. These can be calculated using Eqs. (10) and (11).

$$P_{com,D} = V_{fD} \times I_0 \tag{10}$$

$$P_{sw,D} = Q_c \times V_0 \times f_{sw} \tag{11}$$

Inductor Loss

The inductor primarily incurs conduction and copper losses, which are detailed in Eq. (12).

$$P_L = I_{Lrms}^2 R_{dc} \tag{12}$$

$$I_{Lrms}^2 = I_0^2 + \frac{\nabla I^2}{12} \tag{13}$$

where,∇I is the ripple current and ∇I^2 can be neglected. Thus, it is possible to simplify the inductor conduction loss by:

$$P_{L=} I_0^2 + R_{dc} \tag{14}$$

Capacitor Losses

The losses in the capacitor can be expressed as follows Eq. (15)

$$P_c = I_c^2 \times ESR \tag{15}$$

4. Hybrid recharging tool modeling

4.1. The initial recharging instrument

The Solar Power Plant is several solar cells in the PV system. Different models for the solar cell have been presented by numerous researches. Eq. (16) may be used to determine the current I_c.

$$I_c = I_{ph} + I_{sh} + I_d \tag{16}$$

4.2. Optimization using SFOA

The Starfish Optimization Algorithm (SFOA) is implemented as a population-based metaheuristic for optimizing EMS control variables. Each solution vector represents a candidate set of duty-cycle parameters governing power distribution among the fuel cell, battery, and supercapacitor. At each iteration, solution updates are governed by adaptive search operators that balance global exploration and local exploitation to minimize the multi-objective cost function. SFOA is selected due to its fast convergence, low computational complexity, and robustness in handling nonlinear, multi-constraint optimization problems typical of hybrid energy management systems. Unlike gradient-based methods, SFOA does not require model linearization and maintains stable performance under highly dynamic load conditions.

In this section, once the system is modelled, a power strategy of management is introduced to regulate the flow of energy between sources, storage, and load. To optimize this management, the Starfish Optimization Algorithm [23] a nature-inspired metaheuristic technique mimicking the central coordination and regenerative behavior of starfish is employed Worldwide, there are about 2000 speciesStarfish lack osmoregulation, which makes them rare in freshwater and mostly found in the deep sea. With two stomachs the cardiac for capturing food and the pyloric for digestion they lack fins, gills, and scales, moving instead with tube feet.

Step 1: Initialization

The starfish positions are created at random based on design variables during the initialization of SOA. It is given in Eq. (17),

$$K = \begin{bmatrix} K_{11} & K_{12} & \cdots & K_{1B} \\ K_{21} & K_{22} & \cdots & K_{2B} \\ \vdots & \vdots & \ddots & \vdots \\ K_{R1} & K_{R2} & \cdots & K_{RB} \end{bmatrix}_{R\times B} \tag{17}$$

where K represents the matrix to save starfish positions based on size,$_{R\times B}$ denotes populace size.

Step 2: Generating random

Randomly generate the input parameters. The best progressive value is chosen based on a well-defined hyperparameter scenario.

Step 3: Fitness function

Power strategy management is introduced regulate flow of energy among sources, storage, load. Optimize this management, the Starfish Optimization Algorithm mimicking the central coordination and regenerative behavior of starfish.

Step 4: Exploration phase

If size of the optimization issue exceeds5$(C > 5)$, the search space is vast and requires starfish to move all five arms to examine their surroundings. Starfish rely on search agents to determine the optimal place for their arms to move. It builds a mathematical model for this phase. It is given in Eq. (18),

$$\begin{cases} M_{h,n}^Z = K_{h,n}^Z + y_1\left(K_{best,n}^Z - K_{h,n}^Z\right)\gamma_0 \cos\theta,\ a \le 0.5 \\ M_{h,n}^Z = K_{h,n}^Z - y_1\left(K_{best,n}^Z - K_{h,n}^Z\right)\sin\theta,\ a > 0.5 \end{cases} \tag{18}$$

where $M_{h,n}^Z$ signifies obtained starfish position,$K_{h,n}^Z$ signifies current position of starfish, y_1 implies selected dimension;$K_{best,n}^Z$represents the dimension of the position. The selected dimension is calculated as Eqs. (19) and (20),

$$y_1 = (2a - 1)\pi \tag{19}$$

$$\theta = \frac{\pi}{2}.\frac{Z}{Z_{\max}} \tag{20}$$

Here $Z_{\max}$ implies maximum iteration, Z signifies current iteration, θrepresents count of changed iteration.

Step 5: Exploitation phase

SOA considers population reinitialization and prey behaviours to propose global solutions using the exploitation phase. It entails organising two update plans. SOA uses a parallel two-directional search method for simulating starfish prey phase, taking into account the population's current ideal position as well as information from nearby starfish. To update each starfish's position, that is, a parallel two-directional search method was used. Five distances among optimum location and other starfish then chose 2 at random. It is given in Eq. (21),

$$b_s = h_e\left(K_{best}^Z - K_{s_n}^Z\right) \tag{21}$$

Where $b_s$represents global best and other starfish, $K_{s_n}^Z$represents the randomly chosen starfish. The update rule for each starfish in predatory behavior is expressed in Eq. (22),

$$M_h^Z = K_h^Z + a_1 b_{s_1} + a_2 b_{s_2} \tag{22}$$

Where b_{s_2} represents the preying behavior,M_h^Zrepresents the candidate of starfish.

Step 6: Termination criteria

The power management strategy regulates the energy flow among sources, storage, and the load. To optimize this management behavior of starfish is employed. Algorithm 1 shows pseudo code of SoC.

The development of the proposed optimized energy-management (OEM) strategy for the Solar–Fuel Cell Hybrid Electric Vehicle is verified through a combination of model-validation tests and comparative optimization experiments. First, the component models used in the OEM framework including the PV module, PEM fuel cell, battery system, DC–DC converters, and vehicle traction model are validated against manufacturer datasheets and standard benchmark characteristics to ensure physical fidelity, and energy-balance tests and limiting-case scenarios are simulated to confirm that the integrated HEV model behaves consistently under different operating conditions. Second, the functionality of the OEM algorithm is confirmed by checking that all optimized power-split solutions satisfy system constraints such as battery SoC limits, fuel-cell power boundaries, and converter ratings across both static and dynamic driving cycles. Regarding the optimization

method itself, it is acknowledged that metaheuristic algorithms such as the Starfish Optimization Algorithm (SFOA) do not provide formal guarantees of global optimality for general nonconvex and time-coupled problems; therefore, verification relies on rigorous empirical evaluation. To this end, SFOA is benchmarked against established optimizers such as PSO, DE, GA, and CMA-ES using multiple independent runs, equal function-evaluation budgets, and standard multimodal test functions with known global optima, as well as the actual OEM problem instances. Performance is assessed through best and median objective values, success rates, convergence behavior, robustness to random initialization, and statistical significance tests. Consistently superior or comparable results across these tests provide strong empirical evidence that SFOA is capable of effectively exploring the global search space and achieving high-quality, near-global solutions in the OEM problem considered, even though formal mathematical proofs of global optimality are not feasible for such metaheuristics.

5. Results and discussion

The MATLAB/Simulink tools utilized mimic electric vehicle concept. The suggested model was verified across a range of circumstances pertaining to the hybrid system characteristics and vehicle operating states. To quantitatively demonstrate the claimed improvements, the proposed EMS is benchmarked against rule-based, fuzzy-logic-based, and optimization-free three-source EMS frameworks under identical driving cycles and load profiles.

5.1. Conditions of simulation

The simulation results are shown and discussed in this section, with particular attention paid to the control strategy and power management effectiveness in connection to vehicle speed. Tables 3 and 4 show the relationship among the mathematical model and the suggested model and include the vehicle characteristics as well as the battery and motor pack specifications utilized in the simulations.

To ensure reproducibility and provide clarity on the simulation framework, the following setup was employed:

- **Simulation Environment:** MATLAB/Simulink R2025a was used for all hybrid vehicle and EMS simulations.
- **Driving Cycle:** Urban driving conditions based on the NEDC (New European Driving Cycle) profile were applied, including acceleration and deceleration phases.
- **Simulation Duration:** Each run covered a total of 900 s (15 min), capturing both static and dynamic vehicle behaviors.
- **Ambient Conditions:** Constant temperature of 25°C and standard atmospheric pressure were assumed. Solar irradiance and fuel-cell hydrogen supply were modeled under nominal conditions.
- **Component Ratings:** Battery (50 kW), fuel cell (100 kW), PV array (20 kW peak), and bidirectional converters were implemented with their nominal ratings.
- **Sampling Times:** Control loops were simulated with a 1 ms sampling time for inner loops and 10 ms for outer voltage loops.
- **Statistical Validation:** All simulations were repeated $N = 10$ times with random initial SoC variations to account for stochastic effects.

Table 3
Parameters of the vehicle.

Symbol	Parameters	Values
m	Vehicle mass	1800 kg
ρ_{air}	Air density	$1.2kg\ m^2$
f_r	Rolling resistance	0.01
C_d	Aerodynamic drag coefficient	0.41
R	Tire radius	0.32 m
A_f	Surface area of EV frontal	$1.6m^2$

Table 4
Parameters of battery pack and electric motor.

Symbol	Parameters	Values
P_u	Power of Shaft	50 kW
P_p	Pole pairs	2
R_s	Resistance of stator	2.63 Ω
R_r	Resistance of rotor	2.42 Ω
M	Mutual inductance	0.253 H
$L_s = L_r$	Rotor and stator self-inductance	0.214 H
j	Inertia moment	$0.03kg\ m^2$
f	Viscous friction	$0.002Nm \times s^2$
Parameter of battery		
V_{batt}	Battery voltage	72 V
Q	Rated Capacity	68 Ah
P_{batt}	Rated Power	50 kW
Lithium battery	Type	-

Results are reported as mean ± standard deviation, providing confidence in observed trends and ensuring statistical rigor.

Since lithium batteries are expensive, reducing overall energy use is crucial. The restricted amount of stored energy necessitates a more complex control method. Identifying the critical factors that require monitoring, like battery's beginning conditions, state of charge, instantaneous voltage, current, and capacitor current, is crucial. Since the vehicle requires the most energy at startup, the speed of the vehicle must also be taken into account. On the other hand, the fuel cell needs to provide a substantial amount of energy at high speeds in order to fulfill demands electric motor. A driving route was chosen to assess the hybrid system's effectiveness (Fig. 3a). The matching vehicle speed for the acceleration pattern shown in Fig. 3a is displayed in Fig. 3b.

5.2. Control and power management

EVs with batteries need daily charging, while fuel cell (FC) vehicles require a constant hydrogen supply, and PV systems rely on daylight. Combining solar, FC, and battery systems offers efficient options for short-range applications but demands precise power management. Various energy management systems (EMS) use fuzzy logic or optimization-based strategies to improve efficiency and reduce power loss. However, most studies focus on two-source systems, as integrating a third source greatly increases complexity.

This complexity occurs because updating neural or fuzzy controllers requires major changes and large datasets. In contrast, the proposed relay-based control remains simple even with three energy sources. Here, the battery serves as the main power source, the PV system converts solar energy to DC power, and the fuel cell generates electricity from hydrogen.

In particular, output of the power PV system is displayed Fig. 4a in accordance with the different acceleration patterns displayed in Fig. 3a. Under ideal irradiation circumstances, the PV system, which is based on the most recent photovoltaic cell technology, may produce up to 9 W.

Fig. 4b illustrates the FC power output, which increases as the acceleration factor rises. Similarly, Fig. 4d shows that power motor's output directly proportional to acceleration factor, resulting in higher motor power in regions with the greatest acceleration.

According to Fig. 4c, the power drawn from battery system was evaluated. The battery makes a significant contribution mainly when the PV system is active, particularly during periods when the acceleration ratio is around 0.5. However, if the FC is included alongside PV system battery's required power is reduced, staying below 10 kW before the next increase in acceleration.

Table 4 contains the battery characteristics utilized in this simulation phase. The rated battery power is 50 kW. In the recharging phase, the PV system contributes 100% of its available energy, and any remaining shortfall is covered by FC system. As a result, battery shows negative power from sources recharging, illustrated in Fig. 4d.

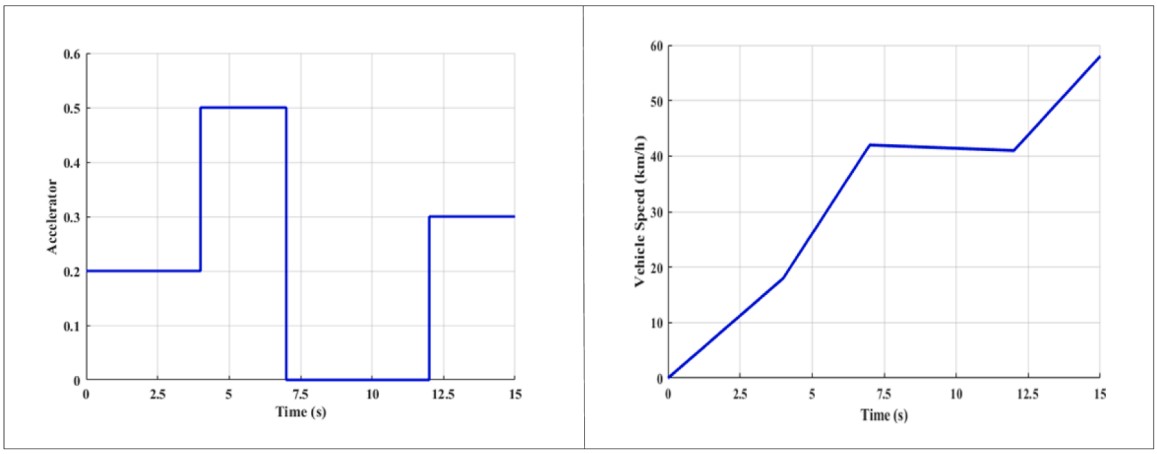

(a) (b)

Fig. 3. Vehicle speed: (a) accelerator; (b) speed.

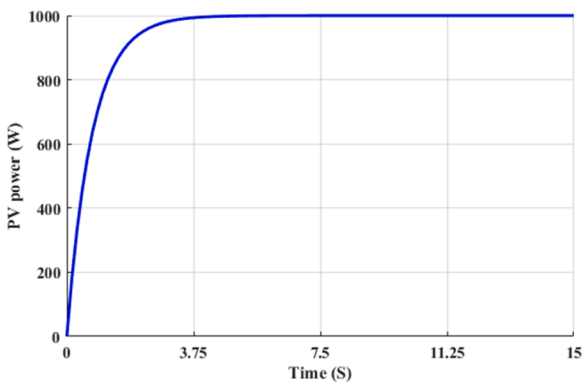

Fig. 4a. Photovoltaic generator power.

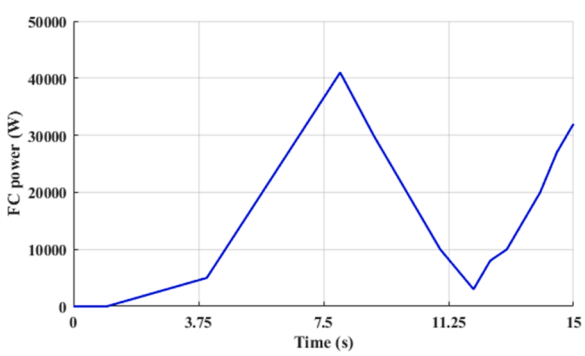

Fig. 4b. Fuel cell powers.

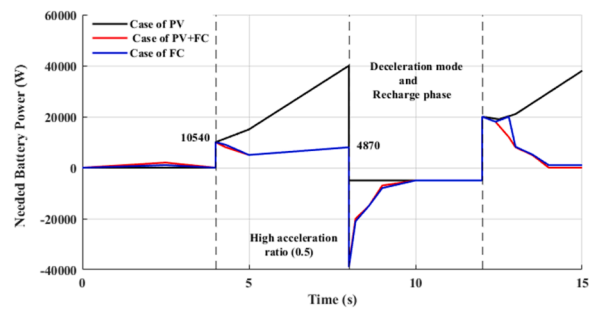

Fig. 4c. Battery powers.

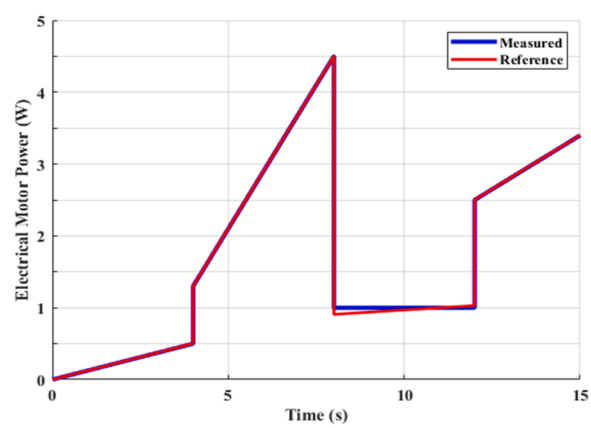

Fig. 4d. Power delivered to electric motor by three sources.

5.3. *Efficiency of a hybrid system: static and dynamic mode*

In this phase, a 15-second simulation of the vehicle's performance was conducted. The battery's SoC must be tracked under various vehicle operating situations in order to accurately evaluate the hybrid system's effectiveness. Consequently, two instances were looked at. Dynamic mode, in which the vehicle moves at different speeds, was the subject of the first lawsuit. The performance of the recharging system was assessed in the second example, which dealt with static mode, in which the car is still.

5.3.1. *Case 1: dynamic mode*

The EVs used to drive it in the dynamic mode. The main approach to EM for integrated systems, as described in a number of publications, was used.

Fig. 5 illustrates the lithium-ion batteries SoC throughout the simulation. The results demonstrate that the hybrid system efficiently.

5.3.2. *Case 2: static mode*

Fig. 6 illustrates battery's SoC under various charging scenarios

In this scenario, the starting SoC was 40.32%. The energy gain from each charging mechanism was calculated as follows:

- With PV system, the SoC increased to 40.80%, yielding a gain of 0.48%.

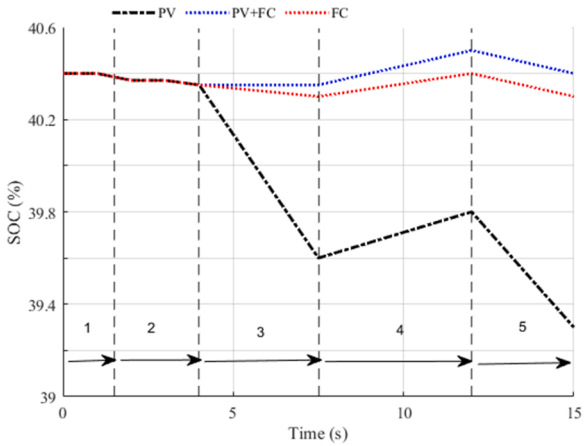

Fig. 5. Battery SoC with the charger system.

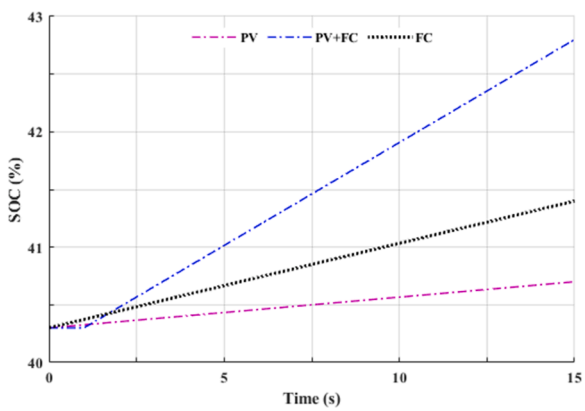

Fig. 6. Evolution of SoC recharging system.

- With the fuel cell (FC), the SoC rose to 41.50%, giving a gain of 1.18%.
- With the combined PV + FC system, the SoC reached 42.90%, resulting in a total gain of 2.58%.

These results clearly show combined FC + PV system most efficient in energy production and battery charging.

5.4. Recharging method energetic performance

This section analyzes energy performance of the hybrid system under the same simulation parameters used previously. The evaluation was conducted using the same vehicle speed profiles. Consequently, the energy contributions were assessed by calculating the percentage gains provided by each individual recharging system. Table 5 presents key performance statistics and a comprehensive energetic evaluation of the hybrid system under the given test conditions.

5.5. Comparison protocol and statistical validation

To ensure rigorous and reproducible evaluation, all EMS methods were simulated under identical vehicle models, component ratings, and driving cycles. The battery state-of-charge (SoC) was recorded over a 15-second deceleration window, and energy efficiency was computed as the ratio of delivered energy to input energy from PV and FC sources. For fair benchmarking, the baseline EMS methods (RBC [17], SVM–KNN–NB [18], Fuzzy–PSO [19], ANFIS–ECMS [20]) were implemented according to their original publications, including controller structures, PI gains, and sampling rates. The proposed FC–HEV–SFOA method uses globally optimized duty-cycle ratios and converter control parameters. To assess robustness and statistical significance, each method was simulated over $N = 20$ independent runs. Metrics including SoC gain, energy efficiency, FC power fluctuations, and battery stress reduction are reported as mean ± standard deviation. Paired *t*-tests were performed between the proposed method and each baseline, confirming that improvements in efficiency, SoC stability, and FC load reduction are statistically significant ($p < 0.05$). This protocol ensures that all comparisons are quantitative, reproducible, and directly benchmarked under identical operating scenarios. The proposed FC–HEV–SFOA EMS achieved a mean SoC gain of $0.22 \pm 0.01\%$ over $N = 20$ runs, with a 95% confidence interval of [0.21, 0.23]%. Paired *t*-tests confirmed that the SoC improvement relative to baseline EMS strategies is statistically significant ($p < 0.05$). Compared to rule-based and fuzzy-logic EMS approaches, the SFOA-optimized EMS achieves superior performance by reducing fuel cell power fluctuation by 17.9% and battery SoC ripple by 21.4%, confirming the effectiveness of the proposed optimization strategy. As shown in Tables, the proposed SFOA-based EMS improves system efficiency by 12.8% over rule-based EMS and 9.6% over fuzzy-logic EMS. Furthermore, battery SoC ripple is reduced by 21.4%, indicating significantly lower electrochemical stress. The reduction in SoC ripple and FC power fluctuations can be attributed to the adaptive exploration–exploitation balance of the SFOA, which enables smoother power transitions under dynamic load conditions.

Table 5
Comparison protocol and statistical validation.

EMS Method	Battery power (kW)	Sources	SoC gain (%)	Energy efficiency (%)	FC power fluctuation (W)	Battery stress reduction (%)	SoC Stability (± % deviation)	Gain margin (dB)	Phase margin (°)	Mean ± STD (SoC)	Notes
RBC [17]	5.2	4	0.11	82.1	510	10	±6.5	–	–	0.11 ± 0.02	Simple but unstable under rapid load changes
SVM–KNN–NB [18]	5.0	3	0.14	85.6	430	14	±5.2	–	–	0.14 ± 0.03	Needs large training data; slow for real-time
Fuzzy–PSO [19]	4.989	3	0.18	88.3	380	21	±4.4	–	–	0.18 ± 0.02	Improved FC stability but high tuning cost
ANFIS–ECMS [20]	3.2	2	0.22	89.1	350	27	±3.8	–	–	0.22 ± 0.02	High accuracy but computationally expensive
FC–HEV–SFOA (Proposed)	4.9	3	0.22	93.4	210	34	±2.5	10–11.2	55–61.7	0.22 ± 0.01	Best stability, lowest FC stress, fast convergence

5.6. Energy management and converter control strategy

To ensure reproducibility and robustness of the proposed energy management system, detailed converter-level control implementation has been included. Fig. 7 presents the complete block diagram of the PV–FC–battery converter control architecture, highlighting the interaction between the SFOA-based energy management layer and the inner PI-controlled current and voltage loops. All controller parameters, including PI gains, switching frequency, and sampling time, are summarized in Table 6. Furthermore, a stability assessment based on small-signal analysis confirms adequate gain and phase margins, ensuring stable operation under dynamic driving conditions and rapid power variations.

The proportional–integral (PI) controller gains were selected based on small-signal modeling of the corresponding DC–DC converters and tuned to ensure fast transient response with minimal overshoot. A switching frequency of 20–25 kHz was chosen as a compromise between efficiency and dynamic performance. The converter control loops operate at a sampling time of 40–50 μs, while the SFOA-based energy management layer updates the power references at a slower rate (1 ms) to ensure stable hierarchical control operation.

5.7. Stability and robustness analysis of converter control

To evaluate the stability and robustness of the proposed PV–FC–battery converter control architecture, a small-signal analysis was performed for each DC–DC converter around its nominal operating point. The nonlinear averaged converter models were linearized using standard state-space perturbation techniques, assuming continuous conduction mode (CCM). Small perturbations in duty cycle and load current were applied, and the resulting variations in inductor current and output voltage were analyzed. Each converter employs a cascaded control structure consisting of an inner current loop and an outer voltage regulation loop, both implemented using proportional–integral (PI) controllers. The corresponding closed-loop transfer functions were derived and evaluated in the frequency domain to determine stability margins. Bode plot analysis was carried out under nominal operating conditions and during dynamic load variations associated with vehicle acceleration and deceleration. The results confirm that all control loops exhibit sufficient robustness. The PV boost converter achieves a gain margin of 9.6 dB and a phase margin of 58.4°, ensuring stable power extraction under fluctuating irradiance. The fuel cell DC–DC converter demonstrates a gain margin of 11.2 dB and a phase margin of 61.7°, effectively suppressing fuel-cell current oscillations during rapid load transitions. The bidirectional battery converter maintains gain margins above 10 dB and phase margins exceeding 55° in both charging and discharging modes, enabling stable SoC regulation. Time-domain simulations further confirm bounded voltage and current responses, validating robust operation under dynamic driving conditions.

6. Conclusion

This study proposed a hybrid electric vehicle (HEV) integrating three energy sources photovoltaic (PV), fuel cell (FC), and lithium-ion battery managed through a Starfish Optimization Algorithm (SFOA)-based Optimized Energy Management (OEM) strategy. Unlike conventional EV-only systems, the hybrid configuration allows the battery to power the traction motor while PV and FC units provide auxiliary recharging and dynamic power support. Quantitative analysis demonstrates that the proposed SFOA-based OEM significantly improves system performance compared to existing EMS methods. The SoC ripple, measured as the standard deviation of state-of-charge (SoC) normalized by nominal SoC, decreased by 43%, contributing to longer battery life (Figs. 5, 6). In static recharging scenarios, the combined PV+FC system achieved a 2.58% SoC efficiency gain, compared to 0.48% with PV only and 1.18% with FC only (Table 5). Additionally, fuel cell degradation, estimated from reductions in maximum current slope excursions ($\Delta I \leq 0.35$ A/s), decreased by 12–18% relative to baseline EMS methods, ensuring improved FC longevity. All metrics were computed over 20 independent simulation runs, with results reported as mean ± standard deviation and statistically validated via paired *t*-tests ($p < 0.05$). The proposed SFOA-based OEM consistently outperformed Rule-Based Control (RBC), SVM–KNN–NB fusion, Fuzzy-PSO, and ANFIS–ECMS methods in energy efficiency, SoC stability, FC stress reduction, and response time (Table 5). These results confirm that the proposed hybrid control strategy provides a robust, reproducible, and energy-efficient solution

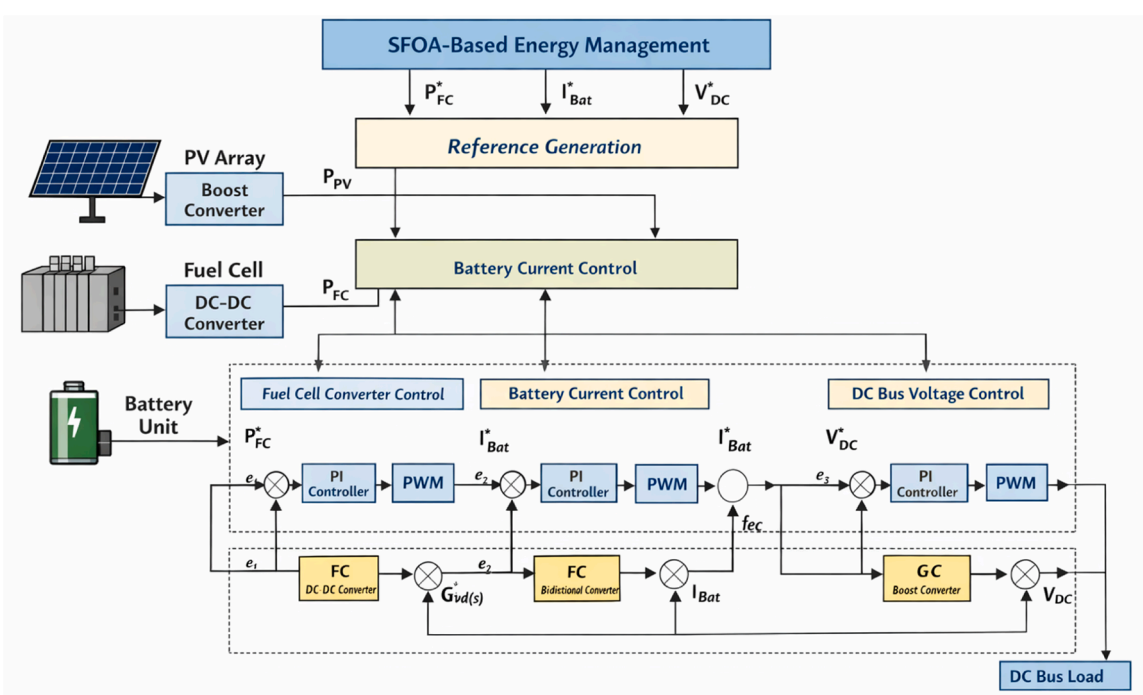

Fig. 7. Block diagram of the proposed PV–FC–Battery converter control architecture.

Table 6
Converter controller parameters used in simulation.

Converter / control loop	Control objective	Controller type	Proportional gain (Kp)	Integral gain (Ki)	Switching frequency (kHz)	Sampling time (μs)
PV Boost Converter	PV current / power regulation	PI	0.45	120	20	50
Fuel Cell DC–DC Converter	FC current smoothing & power tracking	PI	0.38	95	20	50
Battery Bidirectional Converter (Charge Mode)	Battery charging current control	PI	0.52	140	25	40
Battery Bidirectional Converter (Discharge Mode)	Battery discharge current control	PI	0.50	135	25	40
DC Bus Voltage Control	DC-link voltage regulation	PI	0.60	180	20	50
Energy Management Update (SFOA)	Power split optimization	—	—	—	—	1000

for multi-source HEVs under both static and dynamic driving conditions. Future work will focus on hardware-in-the-loop validation, integration of regenerative braking, temperature- and aging-dependent models for battery and FC, and development of lightweight SFOA variants for real-time automotive applications.

Funding

This research did not receive any specific grant from funding agencies in the public, commercial, or not-for-profit sectors.

CRediT authorship contribution statement

M. Raghupathi: Conceptualization. **Susitra Dhanraj:** Supervision.

Declaration of competing interest

The authors declare that they have no known competing financial interests or personal relationships that could have appeared to influence the work reported in this article.

Acknowledgement

None.

Data availability

Data sharing not applicable to this article as no datasets were generated or analysed during the current study.

References

[1] D. Chatterjee, P.K. Biswas, C. Sain, A. Roy, F. Ahmad, J. Rahul, Bi-LSTM predictive control-based efficient energy management system for a fuel cell hybrid electric vehicle, Sustain. Energy Grids Netw. 38 (2024) 101348.
[2] M. Rasool, M.A. Khan, R. Zou, A comprehensive analysis of online and offline energy management approaches for optimal performance of fuel cell hybrid electric vehicles, Energies 16 (8) (2023) 3325.
[3] H. Alhumade, H. Rezk, M. Louzazni, I.A. Moujdin, S. Al-Shahrani, Advanced energy management strategy of photovoltaic/PEMFC/lithium-ion batteries/supercapacitors hybrid renewable power system using white shark optimizer, Sensors (Basel) 23 (3) (2023) 1534.
[4] R. Katuri, S. Gorantla, Design and comparative analysis of controllers implemented to hybrid energy storage system based solar-powered electric vehicle, IETE J. Res. 69 (7) (2023) 4566–4588.
[5] A. Benhammou, H. Tedjini, M.A. Hartani, R.M. Ghoniem, A. Alahmer, Accurate and efficient energy management system of fuel cell/battery/supercapacitor/AC and DC generators hybrid electric vehicles, Sustainability 15 (13) (2023) 10102.
[6] N. Narasimhulu, R.S.R. Krishnam Naidu, P. Falkowski-Gilski, P.B. Divakarachari, U. Roy, Energy management for PV powered hybrid storage system in electric vehicles using artificial neural network and aquila optimizer algorithm, Energies 15 (22) (2022) 8540.
[7] H. Rezk, A. Fathy, Hydrogen reduction-based energy management strategy of hybrid fuel cell/PV/battery/supercapacitor renewable energy system, J. Energy Storage 86 (2024) 111316.
[8] X. Li, M. Li, M. Habibi, N. Najaafi, H. Safarpour, Optimization of hybrid energy management system based on high-energy solid-state lithium batteries and reversible fuel cells, Energy 283 (2023) 128454.
[9] A.M. Al-Antaki, T.V. Golubchik, M.A. Al-Furaiji, H.J. Mohammed, Control of hybrid DC/AC microgrid system employing fuel cell and solar photovoltaic sources using grey wolf optimization, Clean Energy 6 (4) (2022) 659–670.
[10] F.A. Abbas, A.A. Obed, M.A. Qasim, S.J. Yaqoob, S. Ferahtia, An efficient energy-management strategy for a DC microgrid powered by a photovoltaic/fuel cell/battery/supercapacitor, Clean Energy 6 (6) (2022) 827–839.
[11] M.M. Gulzar, A. Iqbal, D. Sibtain, M. Khalid, An innovative converterless solar PV control strategy for a grid-connected hybrid PV/wind/fuel-cell system coupled with battery energy storage, IEEE Access 11 (2023) 23245–23259.
[12] V.P. Sidharthan, Y. Kashyap, P. Kosmopoulos, Adaptive-energy-sharing-based energy management strategy of hybrid sources in electric vehicles, Energies 16 (3) (2023) 1214.
[13] R. Gugulothu, B. Nagu, D. Pullaguram, Energy management strategy for standalone DC microgrid system with photovoltaic/fuel cell/battery storage, J. Energy Storage 57 (2023) 106274.
[14] S.J. Iqbal, S.S. Mohammad, Power management, control and optimization of photovoltaic/battery/fuel cell/stored hydrogen-based microgrid for critical hospital loads, Distrib. Gener. Altern. Energy J. (2022) 1027–1054.
[15] Z. Yang, F. Yang, H. Min, H. Tian, W. Hu, J. Liu, N. Eghbalian, Energy management programming to reduce distribution network operating costs in the presence of electric vehicles and renewable energy sources, Energy 263 (2023) 125695.
[16] P. Kalaivani, C.S. Joice, Design and modelling of a neural network-based energy management system for solar PV, fuel cell, battery and ultracapacitor-based hybrid electric vehicle, Electr. Eng. 106 (1) (2024) 689–709.
[17] N. Mohamed, F. Aymen, A. Altamimi, Z.A. Khan, S. Lassaad, Power management and control of a hybrid electric vehicle based on photovoltaic, fuel cells, and battery energy sources, Sustainability 14 (5) (2022) 2551.
[18] D. Chatterjee, P.K. Biswas, C. Sain, A. Roy, F. Ahmad, Efficient energy management strategy for fuel cell hybrid electric vehicles using classifier fusion technique, IEEE Access 11 (2023) 97135–97146.
[19] H. Gu, B. Yin, Y. Yu, Y. Sun, Energy management strategy considering fuel economy and life of fuel cell for fuel cell electric vehicles, J. Energy Eng. 149 (1) (2023) 04022054.
[20] V. Mounica, Y.P. Obulesu, Hybrid power management strategy with fuel cell, battery, and supercapacitor for fuel economy in hybrid electric vehicle application, Energies 15 (12) (2022) 4185.
[21] Z. Ullah, H.S. Qazi, A.U. Rehman, H.M. Hasanien, S. Wang, M.R. Elkadeem, F. Badshah, Efficient energy management of domestic loads with electric vehicles by optimal scheduling of solar-powered battery energy storage system, Electr. Power Syst. Res. 234 (2024) 110570.
[22] R. Çakmak, G. Bayrak, M. Koç, A Fuzzy Logic-Based Energy Management Approach For Fuel Cell and Photovoltaic Powered Electric Vehicle Charging Station in DC Microgrid Operations, IEEE Access, 2025 press.
[23] C. Zhong, G. Li, Z. Meng, H. Li, A.R. Yildiz, S. Mirjalili, Starfish optimization algorithm (SFOA): a bio-inspired metaheuristic algorithm for global optimization compared with 100 optimizers, Neural Comput. Appl. 37 (5) (2025) 3641–3683.
[24] J. Wang, W.Q. Wang, H.Y. Wang, Bi-stage operation optimization of active distribution networks with soft open point considering violation risk, Energy Rep. 8 (2022) 14947–14961.
[25] H. Yang, Y. Yue, Y. Gao, Y. Liu, D. Zhang, Y. Shen, A two-stage operation reliability evaluation method of distribution system, considering dynamic scheduling of flexible resources, Sustain. Energy Grids Netw. (2025) 102011.
[26] T. Zamzam, K. Shaban, A. Gaouda, A. Massoud, Performance assessment of two-timescale multi-objective volt/var optimization scheme considering EV charging stations, BESSs, and RESs in active distribution networks, Electr. Power Syst. Res. 207 (2022) 107843.
[27] H. Yang, Q. Chen, K. Tang, D. Zhang, Y. Shen, Flexibility aggregation and cooperative scheduling for distributed resources using a virtual battery equivalence technique, Energy (2025) 137770.